FTE automotive

FTE automotive GmbH
P.O. Box 1180
D-96104 Ebern | Germany
Andreas-Humann-Straße 2
D-96106 Ebern | Germany

Telefon +49 (0) 95 31 81 - 0
Fax +49 (0) 95 31 81 - 36 44
E-Mail fte.aftermart@fte.de
Internet www.fte.de

V1223 02/09

Avoidable installation damage with CSCs

Prior to installation

• Handle the CSC carefully. When it is mechanically damaged before installation (e.g., dropped) the quill can be pushed out of its crimp.

• Never pressurize the CSC when it is not fully installed into the gearbox (the crimp is only for transportation and cannot withstand hydraulic forces).

During installation

• In order to avoid angled installation of the CSC, the contact surface on the transmission bell housing must be absolutely flat, undamaged, and clean.

• While installing, pay attention that the CSC is flush with the surface of the transmission bell housing before tightening the screws.

• Use the correct length mounting screws. Screws that are too long prevent the quill from contacting the transmission bell housing with the required pressure. Allowing the quill to lift from the housing and square seal while pressurizing.
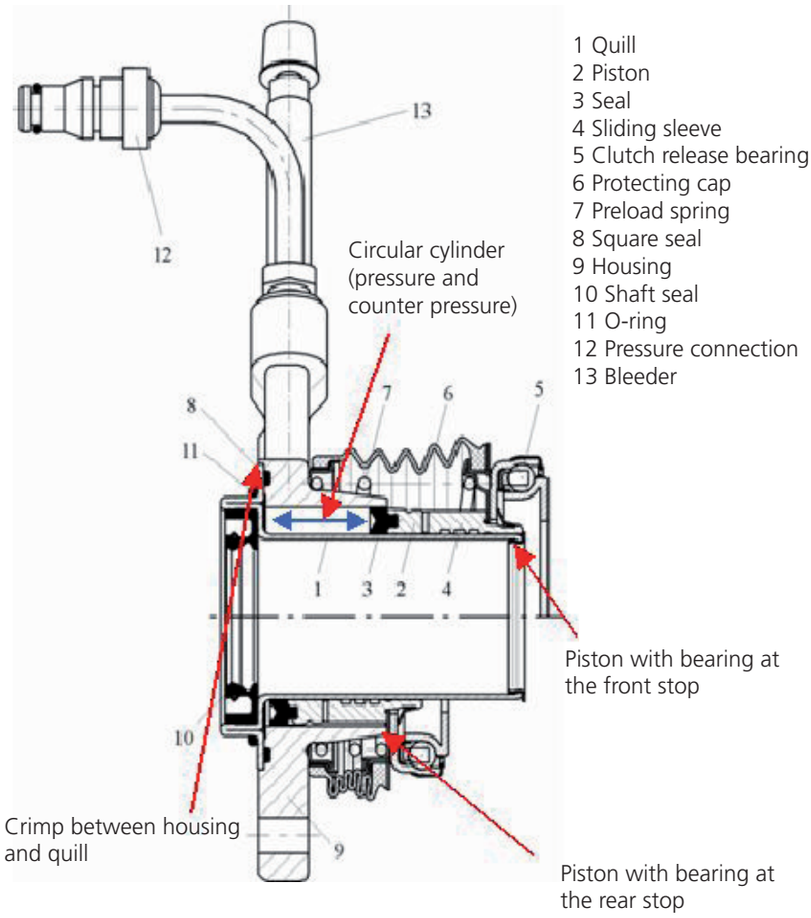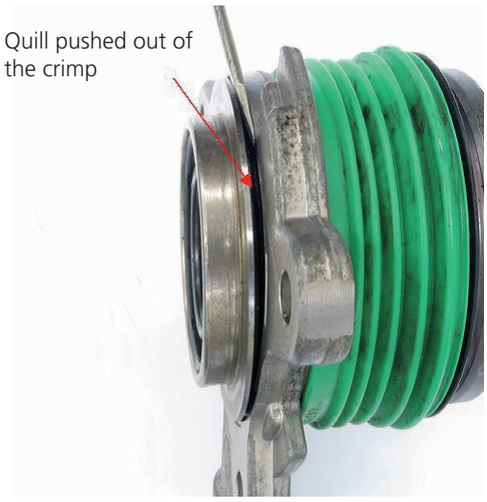
• All mounting screws must be tightened evenly and with the required torque.